TeleRadio

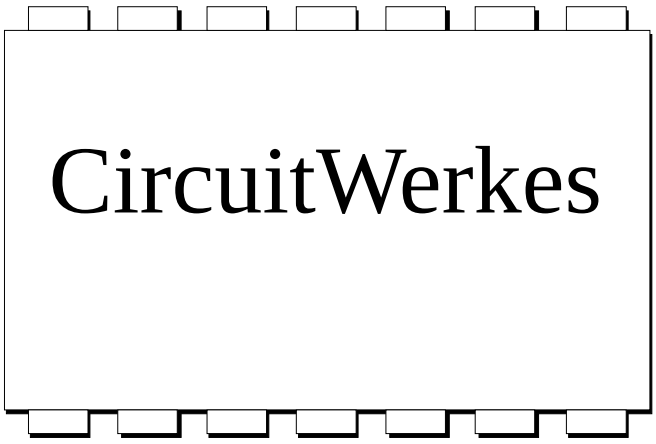

Technical Manual

Revised 06-11-97

CircuitWerkes
3716 SW 3rd Place · Gainesville, FL 32607
(352) 335-6555 · Fax (352) 331-6999

©1992-1997 CircuitWerkes All Rights Reserved. All information contained within is proprietary.
No part of this manual may be reproduced or copied without the express written consent of CircuitWerkes.

TeleRadio Installation and Operating Instructions

I. Description

The CircuitWerkes TeleRadio is a remote controlled listen line. By using DTMF tones a listener in another city can remotely tune the TeleRadio's tuner. The Teleradio is primarily intended for use by group owners and program consultants who want to listen to a market in real-time. This saves the cost of overnight air checks and also gives the programmer a better feel for what is actually happening. The TeleRadio's autocoupler also has an external audio input jack which allows the unit to be used as a standard autocoupler. The autocoupler function allows the user to use the phone line for remote broadcasts, IFBs, or any other temporary function that might need the services of an autocoupler. As with all CircuitWerkes telephone products, the TeleRadio is FCC part 68 certified.

II. Controls and Connectors:

The TeleRadio front panel has two adjustments, one switch, an indicator, and an audio jack. The "On Line" indicator will light whenever the unit has detected an incoming ring and has "seized" the telephone line. The "Headphone" jack is your monitoring point for the TeleRadio. The headphones that came with your unit should be plugged in here. Coupled with the headphone jack is the "Headphone Level" control. using a small, straight bladed screwdriver, you may adjust this control for a comfortable headset loudness. The switch is used to monitor either the radio output or the hybrid output. The Radio position provides the cleanest audio and should be used to set the radio's memory presets. The "null" position is used while adjusting the hybrid. This position monitors the input to the DTMF decoder. While the unit is on line, you can set the "Null Adjust" control so that the least amount of radio audio is heard. The "Null Adjust" control provides for reliable remote control.

The back panel of the TeleRadio contains the power jack, phone jack, coaxial antenna connector, and an external audio connector. The phone and power jacks are self-explanatory. The antenna jack is a type "F" connector similar to those used in cable TV. This jack is used to connect an external antenna to the radio. In most cases, some sort of external antenna will be needed because the radio is confined within the metal chasis which makes an excellent Faraday shield.

III. Installation:

Step 1 Open the top cover by removing the black screws. Set the screws and top in a safe location.

Step 2 Set the TeleRadio into the equipment rack, or wherever its ultimate operating place will be. Do not bolt it in place yet.

Step 3 Plug the headphones into the front panel monitor jack and make sure that the front panel selector switch is in the “Radio” position.

Step 4 Plug the modular phone plug into a phone jack. (note: The TeleRadio is designed to operate into single telephone lines only and will not work through a PBX or other type of system.)

Step 5 Connect a 2.5 foot length of wire or other suitable antenna to the coaxial jack on the back of the unit.

Step 6 Connect the pickup audio reset jumper to select either External Input or Tuner audio when the TeleRadio first comes on line. The default should be set for "R"adio.

Step 7 Plug in the main power adaptor. You should see the radio display come on and you should also hear audio from the headphones.

Step 8 Connect Jumper J3, pins 2 and 3 to enable the NiCad radio memory battery.

Step 9 Check the radio to make sure that:

A. The radio power switch is in the “radio” or “on” position
B. The Stereo/mono switch is in mono (if your radio has a switch).
C. The mark on the volume control is aligned with the similar mark on the chasis of the radio.
D. If your radio has a "Bass Boost" switch it should be off. If your radio has an equalizer it should be set for -10 on treble, +10 on midrange, and about zero on bass.

Step 10 Set the radio presets by first tuning to the desired channel. You must then push the “Mem.” button followed by the button for the desired preset. For more detailed information about operating the radio, please refer to the enclosed GPX owner's manual.

Step 11 Tune the radio to an unused frequency. Usually about 530 or 1700 AM is good. You should hear just a bit of white noise on the headphones.

Step 12 Set the monitor switch to the “Null” position and have someone call the number for the TeleRadio. The unit should answer at the end of the first ring. If you have a telephone coupled in parallel with the unit do not pick up the handset while the TeleRadio is on line; doing so will unbalance the hybrid null, and may cause the unit to hang up.

Step 13 While listening to white noise on the headsets, use a small straight bladed screw driver to adjust the Null Adj. pot so that you hear the least amount of noise. This adjustment is tuned at the factory, so normally only a slight adjustment will be needed. This step must be done while the TeleRadio is "On Line".

Note 1: FCC signal limitations require that the outgoing audio be limited to -9 dBm. In order to comply with this limitation, the coupler board employs a clipper circuit. Increasing the radio output level will overdrive the limiter and will result in distortion at the hybrid which will result in unreliable operation. Although removing the limiter diodes will result in improved performance, it will also void the FCC type approval of the unit.

Note 2: With the monitor switch is in the Null position it is normal to hear distorted program audio when the hybrid is properly nulled. The distortion is the result of differential amplification of the limited audio going down the phone line and the original audio coming from the radio. Telephone audio should not be noticeably distorted.

Step 14 The radio volume is factory-set to make the TeleRadio compatible with long distance-delivered, short duration DTMF tones. If you wish to maximize your TeleRadio's volume we recommend the following: a) make the TeleRadio's null and volume adjustments while online with the long distance party who will make most use of the unit. b) To ensure reliable operation, the volume adjustment should be made while the caller switches between the two loudest stations in your market.

Step 15 Carefully place the top cover back on the unit and install the top screws. Screw the unit securely into its position in the rack.

IV. Operation

Step 1 Call the unit using a DTMF (Touch-tone) phone. The unit should answer the call at the end of the first ring or during the second ring. When the unit answers the line for the first time, it automatically resets itself to memory position number 1.

Step 2 The TeleRadio has a maximum of ten preset memories. These can be either all FM, all AM, or any combination of the two. Pushing buttons 1 through 5 will cause the unit to jump to the first five presets.

Step 3 Push * to activate the second group of five presets. For instance, pushing * followed by the 1 button takes you to the sixth preset. * and 2 is preset number 7, etc. The +5 function remains on and waiting until you select a preset. After you have selected a +5 preset, the next preset that you select will be from the first five unless you push the * button again. If you push the * button and then change your mind, you can deselect the +5 function by pushing the * button a second time.

Step 4 Pushing the 7 button momentarily causes the radio to change frequency up one channel. Holding the 7 button down for more than two (2) seconds causes the radio to scan up until it finds a strong signal. Note: do not hold the button down for more than 2 seconds because holding the button continuously will force the tuner not to stop until you release the button.

Step 5 Pushing the # 8 button is exactly the same as in step 4 except that it causes the radio to change frequency down instead of up.

Step 6 The 9 button causes the radio to change bands.

Step 7 If you desire, you can remotely change the stations that appear on the presets. If you find a new station that you wish to add to the presets instead of an existing one, push the # button followed by the preset that you want to change. If you accidently push the # button, wait 10 seconds and the memory set function automatically cancels.

Step 8 To select external audio input, press the 6 button, to return to the tuner press 0.

Step 9 When you are through listening, simply hang up. The TeleRadio will hang up too and be ready for the next call.

NOTE : Some electronic phone systems are incapable of producing continuous DTMF tones. As a result, they are not able to use the scan and preset change functions detailed in steps 4 and 6. Also, due to the short duration of these phone's tones the radio may occasionally not respond to a tone on the first try. If that happens simply try again. If the problem persists or becomes worse with time, the null may have to be readjusted or the output of the radio may have to be turned down slightly.

V. Simplified Theory of Operation:

Four basic units are combined in one chasis to create the TeleRadio. The autocoupler, which includes the FCC approved section, detects the incoming ring signal and answers the line. The coupler passes bidirectional audio to the phone line and to a simple electronic hybrid. The hybrid circuit passes the outgoing radio audio to the phone line while simultaneously permitting the DTMF decoder to receive incoming control tones from the remote operator without radio audio interference. The hybrid section also contains a headphone audio amplifier and the power regulators that are used to supply power to the main board as well as the digital tuner. Along with the power regulator, a stearing diode allows for an external battery backup to preserve the radio's memories during power failures. The DTMF decoder board detects the incoming control tones and decodes them. The decoded outputs drive optoisolators. Each optoisolator has its own output pair which is not common to any other line. The decoded control outputs from the DTMF decoder feed a digital personal radio through a 20 to 8 line passive mixer board.

VI. Care and Feeding:

The TeleRadio is designed to operate in a variety of environments. All components are conservatively rated. Under normal conditions, the TeleRadio is designed to give many years of trouble free service. Excessive temperatures, high humidity, strong impacts, or prolonged vibration will shorten the unit's life. Also, since the TeleRadio is a wide banded receiving device, we suggest that it be mounted away from strong RF fields such as those present at most transmitter sites. Such fields should not damage the unit, however, they will probably overload the tuner, reducing its sensitivity and producing intermodulation products.
Cleaning the cabinet should be done with a mild soap and water solution. Detergents or solvents may mar the finish or damage the printing.

V. Expanded Theory of Operation:

Autocoupler Section

MPC-2 type approved section: The telephone line tip and ring connect through an RJ-11c jack to the MPC-2b circuit board. An MOV across the line suppresses any hazardous transients. Two 0.1 uF DC blocking capacitors pass audio to the telco transformer when the unit is off-line. One input of an h11aa1 ac input optocoupler is connected to tip through normally closed contacts on the dpdt relay; the other input connects to ring through a .56uF capacitor and a 22k resistor. When a ring occurs the optocoupler's output transistor turns on and provides an open collector output, which is the ring detect output of the MPC2b. When 12vdc is applied to the field of the dpdt relay, the ring detect optocoupler is taken off line and the relay closures make a dc path from tip and ring to one side of the transformer. The line current detect optocoupler is then also connected between tip and ring through a 1k current limiting resistor. When the caller hangs up the optocoupler turns off, signalling that the call is over. FCC required signal limiting is accomplished with special back to back diodes across the user side of the telco transformer. While removing these diodes will result in significantly improved audio performance, we do not recommend their removal because it will void the unit's warranty, the FCC type approval and possibly allow excessive signals to pass through the coupler. Because of FCC regulations, any modification of the MPC-2 voids the unit's type approval.

Logic & Control section: The ring detect pulse turns on Optocoupler U102 pulling the inputs of U104A low and causing its outputs to go high, in turn charging C105. When the ring is over, U104's outputs go low. The sudden discharge of C105 causes a momentary low to appear on pin 6 of U104(b). This low pulse triggers an R-S latch that is comprised of nand gates U104b and U104c. Once on, the autocoupler's RS latch turns on transistor Q101, in turn controlling the line relay in the MPC-2. When Q101 initially turns on, it charges C107 which causes a momentary high pulse that turns on Q102 to provide the tuner & external audio resets. D104, R108 and C106 form a unidirectional timing circuit that holds the reset nand gate high (U104D) until line current has been established. When the timing constant has expired, the line current detector output of the MPC-2 will keep nand gate U104D from resetting the r-s latch. When the calling party hangs up, the Telco Central Office (CO) signals with a momentary zero-crossing (the line voltage momentarily reverses or drops to zero). The line current detector output goes high during this zero crossing and forces the output of nand gate U104D low, that resets the R-S latch, hanging up the line. U401C, C111, C112 & R113 form a power on reset circuit that prevents coupler from seizing the line when first powered.

Hybrid / Audio Amp & Power Supply

Hybrid Circuit: The high side of the radio audio is coupled to the hybrid circuit through low pass filter R305-C303. The low side of the incoming radio audio is ac coupled to the hybrid ground through C304. Audio high side ac coupling is provided through R302. The hybrid is composed if an MC-1458 op amp used in a differential mode. Variable resistor R306 allows the amplifier's inputs to be matched to the telephone line, providing cancellation of the radio audio. When DTMF audio is recieved back from the coupler, the resistance of R306 provides a difference signal between the two inputs of U301A. This difference signal is amplified and ac coupled to the DTMF board and monitor amplifier. R310, R311, R312, R313, C313, C314, C315 and U301B comprise a 2 pole active low-pass filter with a cut-off frequency of 1.8kHz. Capacitor C310 provides additional high frequency roll off at the hybrid output. Resistors R302, R303, R304, and R314 along with capacitor C312 form a bias ladder allowing U301 to operate from a single ended power supply. The effectiveness of the hybrid is dependant upon the complex impedances to which it is connected. If the TeleRadio is moved from one phone line to another, the null will probably require a slight adjustment due to impedance differences between phone lines.

Monitor Circuit: The audio monitor amplifier section is an LM-386 operating in a low gain mode. The maximum power avialable from the amplifier is 400 mW which is more than sufficient to drive most headphones. Variable resistor R322 provides audio gain control. The output is ac coupled to the headphone jack. Capacitor C307 provides high frequency stabilization.

Power Supplies: The 12 and 5 Volt power supplies are standard three terminal linear regulators. The 12Volt supply is used to operate all sections of the TelRadio except for the DTMF decoder. The 3V power supply section is driven from the 12 Volt supply and is used to power the personal radio. It is an LM-317T adjustable voltage regulator which uses fixed resistances to provide a regulated 3 Volt output. Also, a stearing diode allows for the addition of a battery backup in the event of a power failure. Resistor R317 and jumper J2 allow for nicads to be used and recharged.

DTMF Tone Decoder Section

Input audio is low pass filtered by the combination of R2/C1 to remove harmonic distortion and improve tone detection. The input audio is capacitor coupled to the Silicon Systems SSI-202 low power DTMF receiver. The SSI-202 requires only a one resistor and one crystal for a frequency reference. The BCD output from the SSI-202 is decoded by the 74LS154, a 4 to 16 line decoder. Transistor Q201 acts along with resistor R205 as an inverter on the data valid line to pull the two strobe inputs of the 74LS154 low. The outputs of the 74LS154 directly drive the 12 quad packaged optocouplers to saturation. The optocouplers are protected from oversaturation by current limiting resistor R204. Output from the individual optocouplers are combined by a 20 to 8 line passive mixer which interfaces with the tuner.

External Audio Switcher

The TeleRadio audio switch interfaces with the DTMF reciever of the TeleRadio to provide for remote controlled switching between the external audio jack and the tuner audio. The switch is made up of a CMOS Set/Reset (S/R) latch, a driver transistor and a DPDT relay.

External audio is sent to the N/C contacts of K1 while the tuner audio is connected to the N/O contacts. K1's commons are sent to the coupler via the hybrid board. Audio that is connected through the external port is unbalanced because it does not go directly to the coupler. If you cannot accept an unbalanced port, we recommend the addition of a transformer to the audio path. Transformers that are adequate for telephone use can be found at Radio Shack (and many other places) for under $5.00. If you remove the audio connectors from the latch board, be sure to observe the wiring codes. The tuner will not function if the output wires are reversed.

VI. Trouble Shooting:

Coupler

Problem: Unit does not pick up on incoming ring.
Solution: U102 (H11AA1) toasted, 4093, or Q101 dead.

Problem: Coupler does not pick up but audio switcher resets after a ring or two. Green online LED may or may not come on briefly (possibly dimly) after a ring.
Solution: Q101 is weak, MPC-2 line seize relay is fried, D103 shorted or tuner/other bad component is loading down the 12V power supply. Carefully check all 3 heatsinks for excessive heat, especially the LM-317. Unplug the tuner power at the board being sure to observe the polarity. Call the TeleRadio. If it answers, the tuner is defective.

Problem: Picks up then hangs up.
Solution: U104 (4093) or H11aa1 line current detector on MPC-2 is zotched.

Problem: Online LED doesn't light when coupler picks up.
Solution: R110 is bad or the LED has become very unhappy.

Problem: Unit picks up, but won't hang up. (part 1)
Solution: Your phone system may not support CPC, the standard end of call battery reversal. Test this by removing the phone line while the TeleRadio is on line. If it hangs up immediately, it is working normally & you don't have CPC. Some phone companies provide CPC only on customer request. If it is not available, you will have to purchase an optional call progress decoder from CircuitWerkes that can detect dial tone or busy signals. Contact us to discuss your particular situation.

Problem: Unit picks up, but won't hang up. even when the phone line is removed.
Solution: Line current detector (H11aa1) shorted, U104d (4093) smoked or Q101 leaky.

Problem: Nothing happens, coupler appears to be in hibernation.
Solution: Check for proper connection to phone line and power first; if 12v power supply on the board is working, suspect U104 (4093), Q1 or U102.

Problem: The radio resets to the number one preset at pickup but stays latched that way while online. Radio orks normally when off line.
Solution: Capacitor C107 is shorted

Note: Transistors Q1 & Q2 are medium gain switching transistors. They can be replaced by an equivalent like the ECG123A or the Radio Shack 276-1617.

DTMF Section

Problem: One or more outputs do not operate with an incoming tone.
Cause: Failed optocoupler(s), failed 74LS154, or low input level.

Problem: None of the outputs function with incoming tones; BCD data (during incoming tone) good at pins 1, 18, 17,16 of the SSI202.
Cause: Bad 74LS154, bad q201, or R204 open.

Problem: No outputs function and there is no BCD data on pins 1, 18, 17, or 16 of the SSI202.
Solution: Power supply failure, improper audio input level, bad SSI202 or damaged crystal

About Tuner Sensitivity:

The radio that is used in the TeleRadio is a relatively generic portable type, not known for their great RF abilities. Our tests on several dozen portable radios sold in the US, showed that regardless of maker, all use the same chipsets and have similar RF sensitivity. The external RF jack is relatively effective at increasing performance of the FM tuner, however it is less effective on the AM side. We have found however, that excellent AM performace can be achieved by coupling an external Antenna to the tuner via a ferrite bar taken from an old AM radio and wrapped with 100 turns or so of magnet wire. The bar should be coupled to an external long wire dipole and placed inside the TeleRadio enclosure near the "top" the tuner. Alternately, even better performace can be achieved by opening the tuner and wrapping the magnet wire arount the internal bar antenna.

TeleRadio Main Board Layout

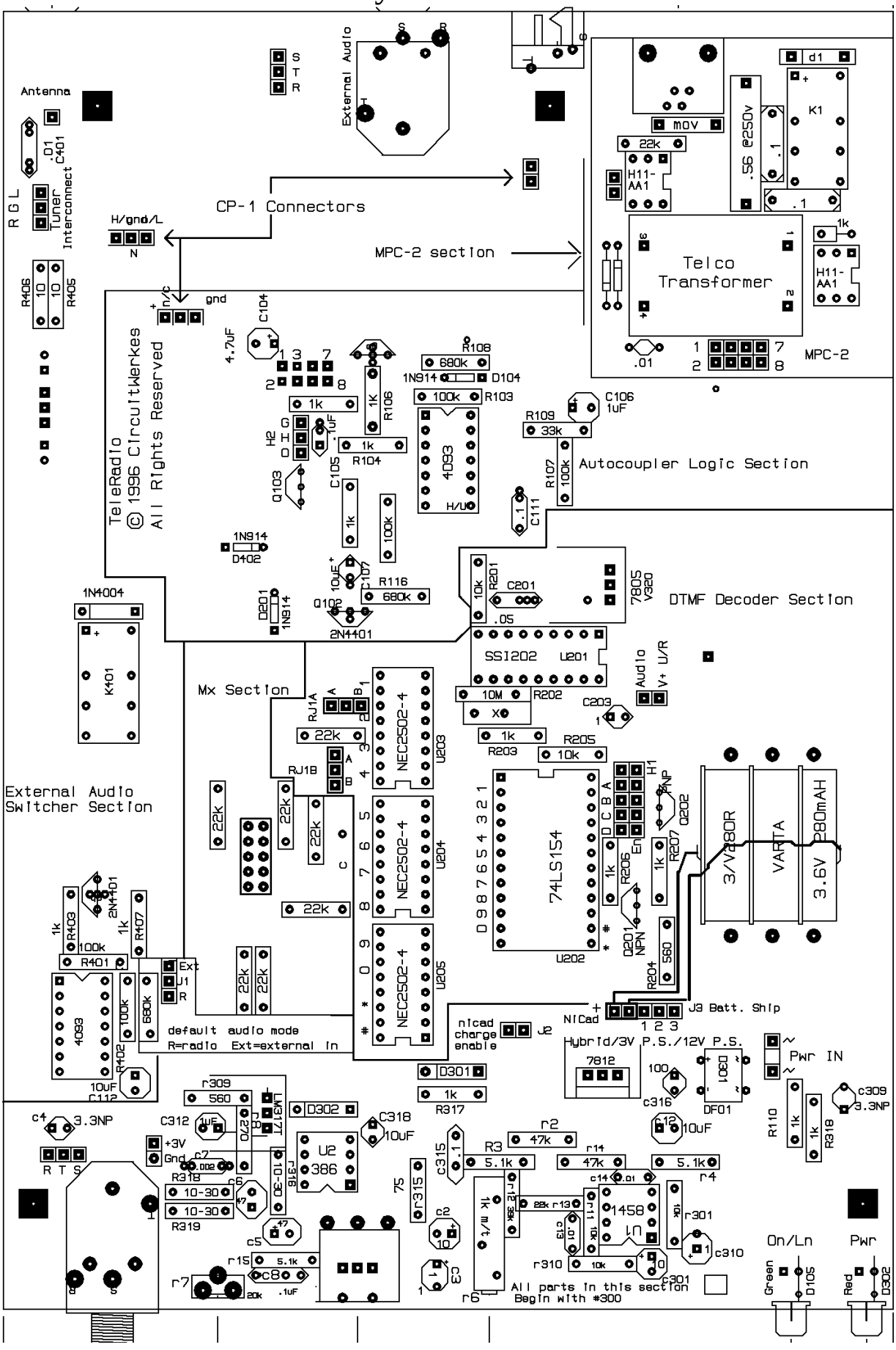

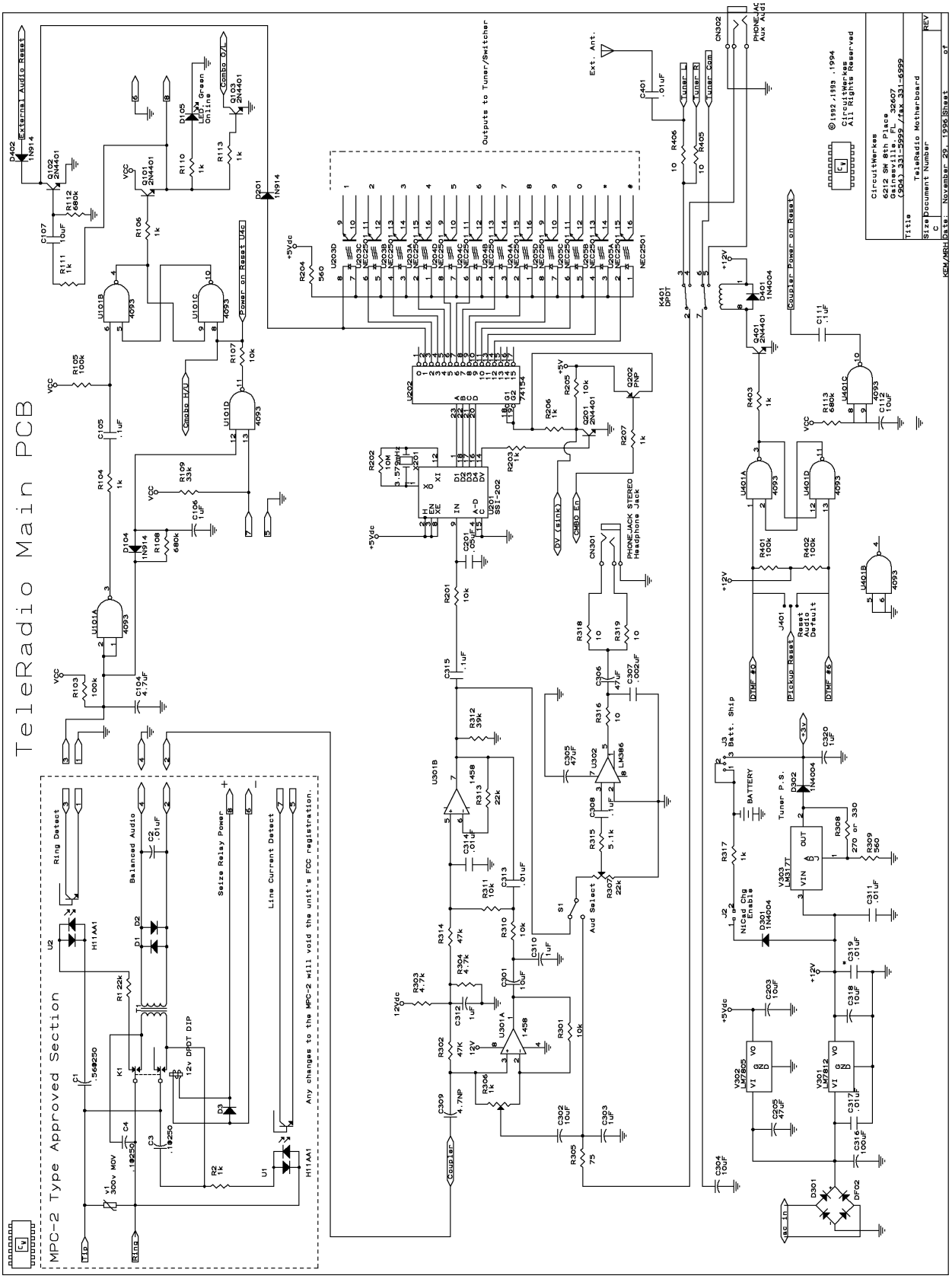
TeleRadio Main PCB
MPC-2 Type Approved Section
Any changes to the MPC-2 will void the unit's FCC registration.
Outputs to Tuner/Switcher
Ring Detect
Balanced Audio
Seize Relay Power
Line Current Detect
External Audio Reset
Power on Reset U4c
Combo H/U
Combo O/L
Coupler Power on Reset
Coupler
Aud Select
Tuner P.S.
Batt. Ship
BATTERY
Reset Audio Default
Pickup Reset
DTMF #0
DTMF #6
PHONE-JACK STEREO Headphone Jack
Ext. Ant.
Tuner L
Tuner R
Tuner Com
PHONE-JAC Aux Audi
K401 DPDT
12v DPDT DIP
CircuitWerkes
6212 SW 8th Place
Gainesville, FL 32607
(904) 331-5999 /fax 331-6999
TeleRadio Motherboard
Document Number
November 29, 1996
KEM/MRH

Appendix A

{Information the FCC makes us include...}

NOTIFICATION TO THE TELEPHONE COMPANY

This equipment complies with Part 68 of the FCC Rules. You will find the label located on the solder side of the PCB, and on the bottom or back of the equipment enclosure if device is enclosed. This label contains the FCC Registration Number and Ringer Equivalence Number (REN) for this equipment. You must, upon request, provide this information to your telephone company. The REN is useful to determine the quantity of devices you may connect to your telephone line and still have all of those devices ring when your telephone number is called. In most, but not all areas, the sum of the RENs of all devices connected to one line should not exceed five (5.O). To be certain of the number of devices you may connect to your line, as determined by the REN, you should contact your local telephone company to determine the maximum REN for your calling area.

JACK TYPES NEEDED

Connection to the telephone network should be made by using standard modular telephone jack type RJ11C.

INCIDENCE OF HARM

If your telephone equipment causes harm to the telephone network, the telephone company may discontinue your service temporarily. If possible, they will notify you in advance. But if advance notice is not practical, you will be notified as soon as possible. You will be informed of your right to file a complaint with the FCC.

RIGHTS OF THE TELEPHONE COMPANY

Your telephone company may make changes in its facilities, equipment, operations or procedures that could affect the proper functioning of your equipment. If they do, you will be notified in advance to give you an opportunity to maintain uninterrupted telephone service.

MALFUNCTION OF THE EQUIPMENT

In the event this equipment should fail to operate properly, disconnect the unit from the telephone line. Try using another FCC approved telephone in the same telephone jack. If the trouble persists, call the telephone company repair service bureau. If the trouble does not persist and appears to be with this unit, disconnect the unit from the telephone line and discontinue use of the unit until it is repaired. Please note that the telephone company may ask that you disconnect this equipment from the telephone network until the problem has been corrected or until you’re sure that the equipment is not malfunctioning.

COIN SERVICE OR PARTY LINE USE

This equipment may not be used on coin service provided by the telephone company. Connection to party lines is subject to state tariffs.

REPAIR OR SERVICE INFORMATION

In the event of the need for service or repair, call CircuitWerkes at (352) 335-6555 for a Return Merchandise Authorization number (RMA). Then carefully package the unit along with a note of the problem and send it to the address below. Clearly indicate the RMA number on the outside of the box. We cannot accept returns without an RMA. Be sure to include your address (not a PO box), telephone number and best time to call.

CircuitWerkes
Attn: Customer Service Dept.
3716 SW 3rd Place
Gainesville, Fl 32607

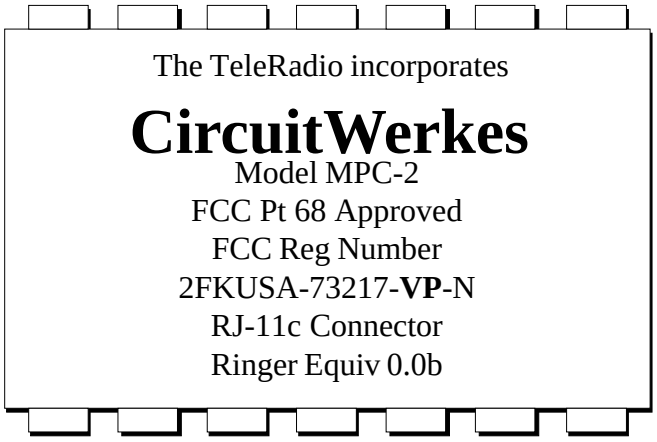

CircuitWerkes Limited Warranty

This product is warranted against defects for two years from date of purchase from CircuitWerkes and CircuitWerkes authorized distributors. Within this period, we will repair it without charge for parts and labor. Proof of purchase-date required. Warranty does not cover transportation costs, or a product subjected to misuse, accidental damage, alteration (except as authorized by CircuitWerkes), improper installation, or consequential damages.
Except as provided herein, CircuitWerkes makes no warranties, express or implied, including warranties of merchantability and fitness for a particular purpose. Some states do not permit limitation or exclusion of implied warranties; therefore, the aforesaid limitation(s) or exclusion(s) may not apply to the purchaser. This warranty gives you specific legal rights and you may also have other rights which vary from state to state.