CircuitWerkes' CP-2 Call progress Decoder Option Board

The CircuitWerkes CP-2 Call Progress Decoder is a precision tone decoder designed to listen for the presence of dial tone or busy (reorder) signals on telephone systems that do not provide end of call battery signalling. When dial tone or busy is detected for a period of several seconds, the CP-2 breaks the connection to the autocoupler, or phone system, causing it to hang up.. Note: high ambient audio levels can mask (or simulate) central office call progress tones, so some adjustment of send audio may be required for reliable operation. The send audio level may need to be set slightly lower than normal to allow the call progress decoder to recognize the tones if used over continuous program feeds.

The CP-2 is jumperable to detect either or both dial (via J1) and busy (via J2, position "B") tones. Completely removing J1 or J2 disables that particular function. It is strongly suggested that you disable whichever tone is not used on your phone system to reduce the risk of false tripping. Also, when J2 is set for the "A" position, any call progress tone will cause a hang-up. Because this mode is especially easy to false trip, it should be used only as a last resort when your phone system does not provide busy (reorder) or dial tones. To detect all tones, J4 must also be in the "A" position. The "620" position is for detecting single 620Hz tones used in some foreign phone systems. The length of time required for disconnection is adjustable by the two potentiometers on the board. At least 3 to 5 seconds is suggested for both types of signals to prevent false tripping. Turning the pots clockwise increases the delay before hang-up. J3 adds 10dB of gain to the input & **MUST** be "on" for busy detection. J8 sets the duration of the CPC output. When J8 is off, CPC will be several seconds long. When on, CPC will be a few hundred milliseconds.
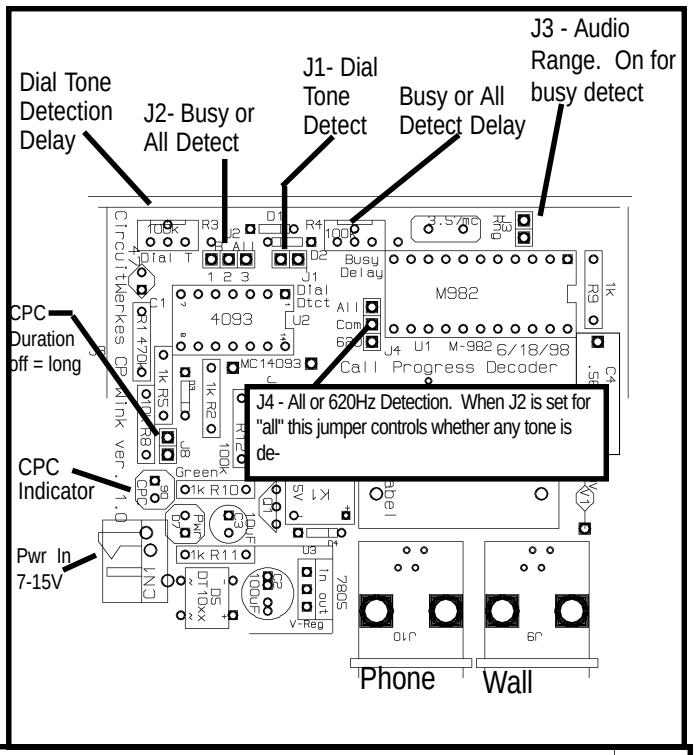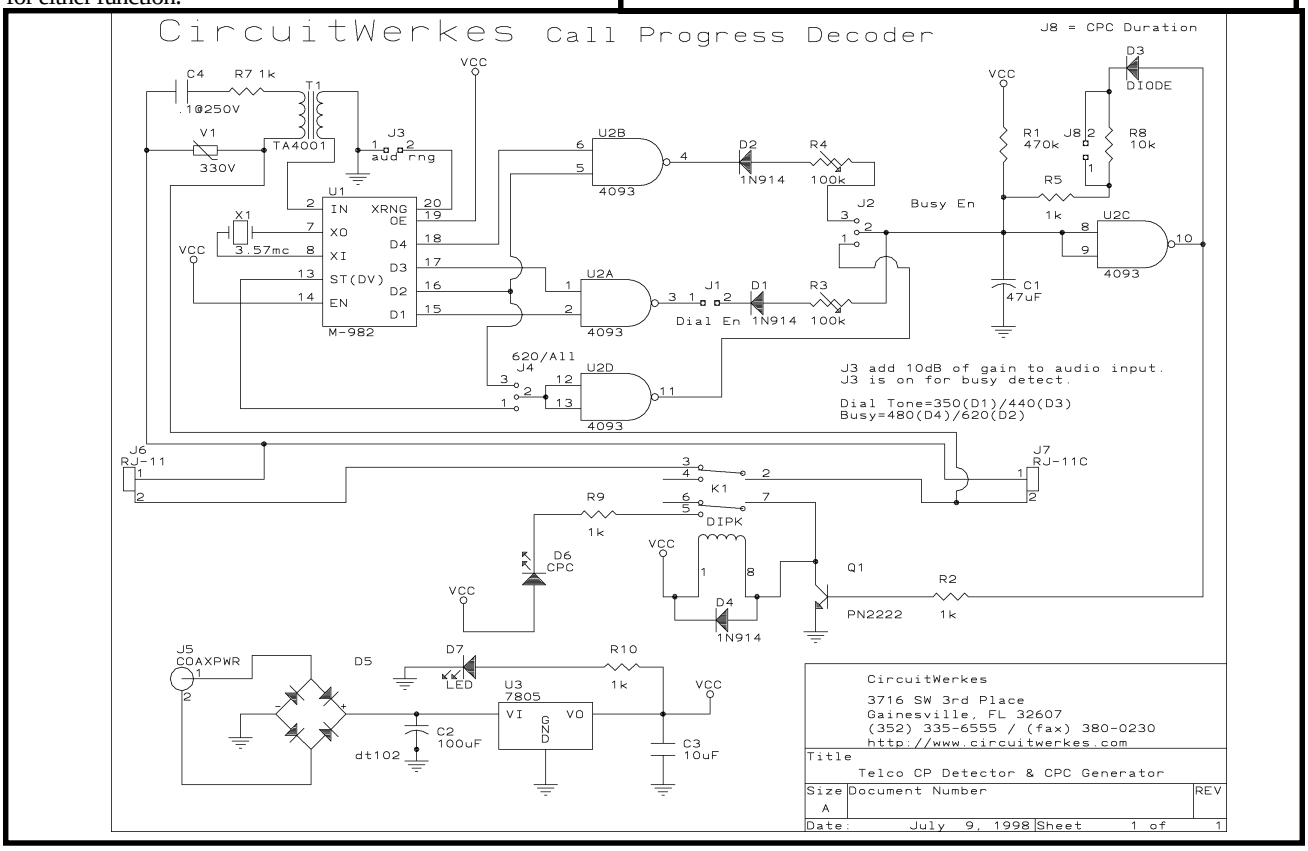
AC or DC Power is supplied at the coaxial connector. The power supply should be 7 to 15V and capable of providing 100mA. The two RJ-11 jacks connect theCP-1 tot he phone system (wall) and to the answering device or subordinate phone system which requires CPC (phone). The CP-2 will work with either jack used for either function.